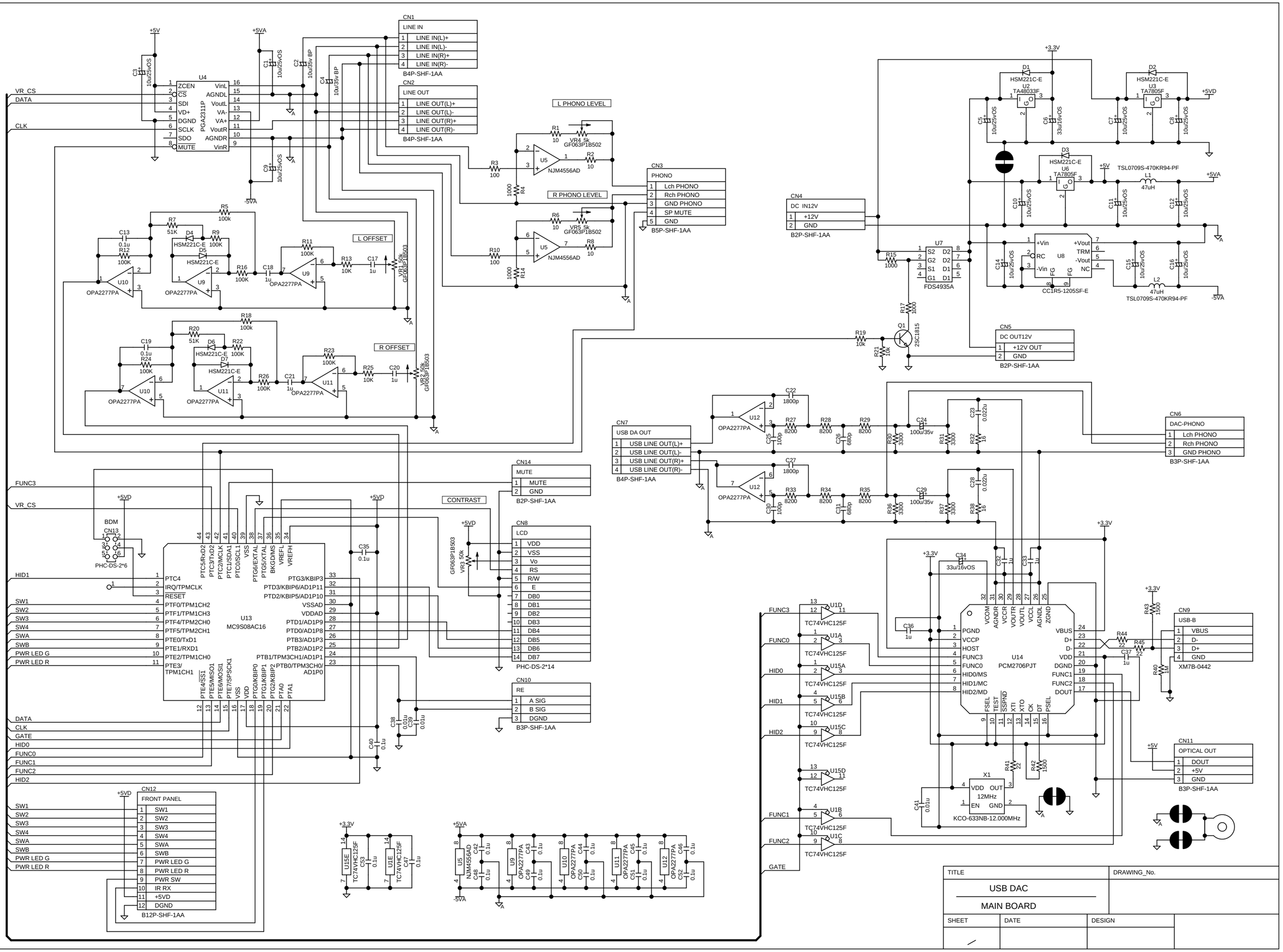
CN1
LINE IN
1 LINE IN(L)+
2 LINE IN(L)-
3 LINE IN(R)+
4 LINE IN(R)-
B4P-SHF-1AA
CN2
LINE OUT
1 LINE OUT(L)+
2 LINE OUT(L)-
3 LINE OUT(R)+
4 LINE OUT(R)-
B4P-SHF-1AA
CN3
PHONO
1 Lch PHONO
2 Rch PHONO
3 GND PHONO
4 SP MUTE
5 GND
B5P-SHF-1AA
CN4
DC IN12V
1 +12V
2 GND
B2P-SHF-1AA
CN5
DC OUT12V
1 +12V OUT
2 GND
B2P-SHF-1AA
CN6
DAC-PHONO
1 Lch PHONO
2 Rch PHONO
3 GND PHONO
B3P-SHF-1AA
CN7
USB DA OUT
1 USB LINE OUT(L)+
2 USB LINE OUT(L)-
3 USB LINE OUT(R)+
4 USB LINE OUT(R)-
B4P-SHF-1AA
CN8
LCD
1 VDD
2 VSS
3 Vo
4 RS
5 R/W
6 E
7 DB0
8 DB1
9 DB2
10 DB3
11 DB4
12 DB5
13 DB6
14 DB7
PHC-DS-2*14
CN9
USB-B
1 VBUS
2 D-
3 D+
4 GND
XM7B-0442
CN10
RE
1 A SIG
2 B SIG
3 DGND
B3P-SHF-1AA
CN11
OPTICAL OUT
1 DOUT
2 +5V
3 GND
B3P-SHF-1AA
CN12
FRONT PANEL
1 SW1
2 SW2
3 SW3
4 SW4
5 SWA
6 SWB
7 PWR LED G
8 PWR LED R
9 PWR SW
10 IR RX
11 +5VD
12 DGND
B12P-SHF-1AA
CN13
BDM
PHC-DS-2*6
CN14
MUTE
1 MUTE
2 GND
B2P-SHF-1AA
U4
PGA2311P
U13
MC9S08AC16
U14
PCM2706PJT
U7
FDS4935A
U8
CC1R5-1205SF-E
X1
KCO-633NB-12.000MHz
L PHONO LEVEL
R PHONO LEVEL
L OFFSET
R OFFSET
CONTRAST
VR_CS
DATA
CLK
FUNC3
HID1
SW1
SW2
SW3
SW4
SWA
SWB
PWR LED G
PWR LED R
HID0
FUNC0
FUNC1
FUNC2
HID2
GATE
TITLE
USB DAC
MAIN BOARD
DRAWING_No.
SHEET
DATE
DESIGN