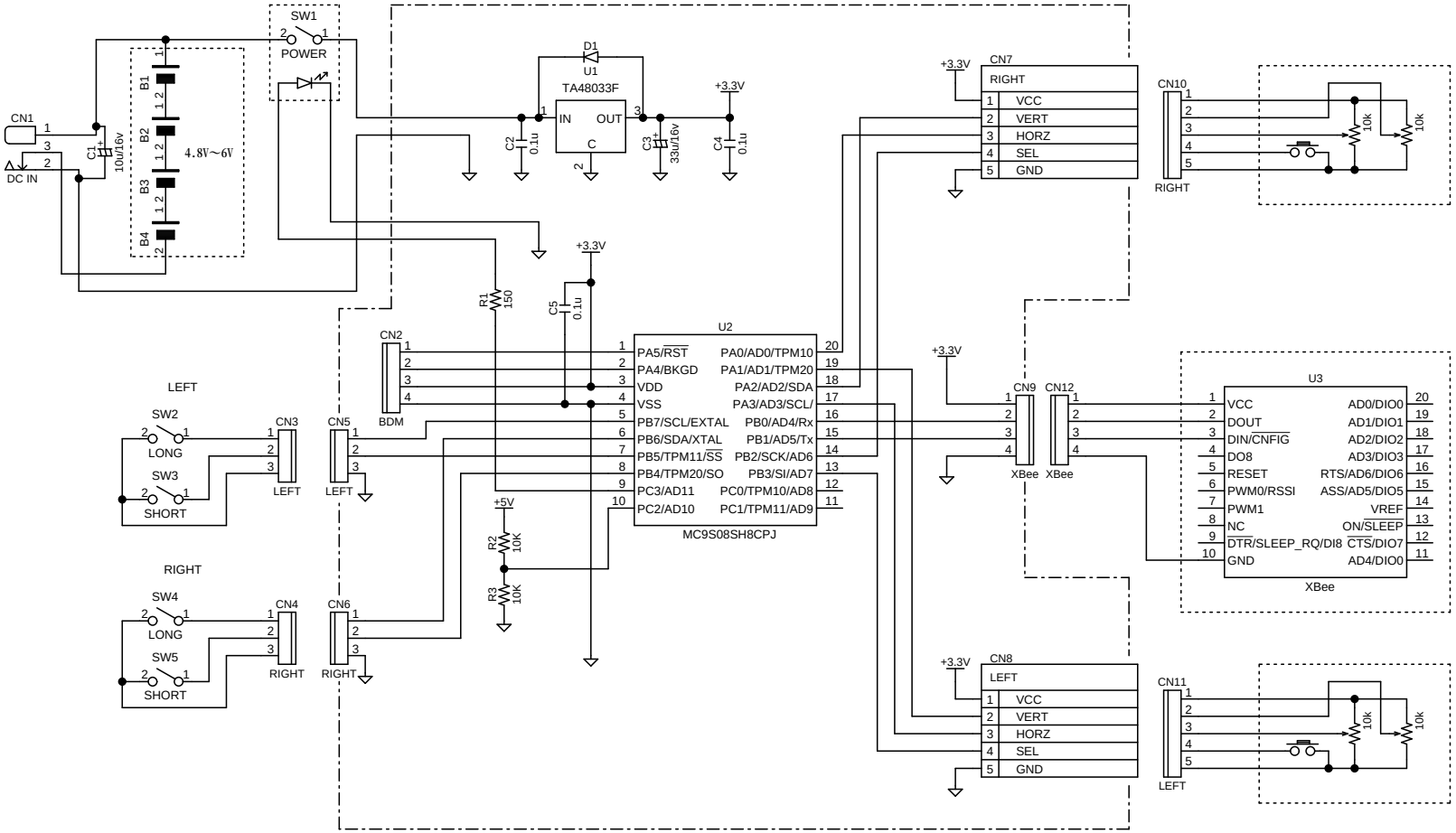

TITLE	DRAWING_No.
RC_TX	

SHEET	DATE	DESIGN
/		